JUKI®

No. 0191-04
1985・3
BES05730PJA

model S057, S058

スイング方式ひだ取り装置（ペダル式）

Swing type Intermittent Shirring Attachment (Pedal type)

model S097, S098

スイング方式ひだ取り装置（手動式）

Swing type Intermittent Shirring Attachment (Manual type)

model S112

スイング方式上ひだ取り装置(手動・ペダル式)

Swing type Intermittent Shirring Attachment (Pedal/Manul type)

model S114, S115

スイング方式下布ひだ取り装置

Swing type Lower Intermittent Shirring Attachment

PARTS BOOK

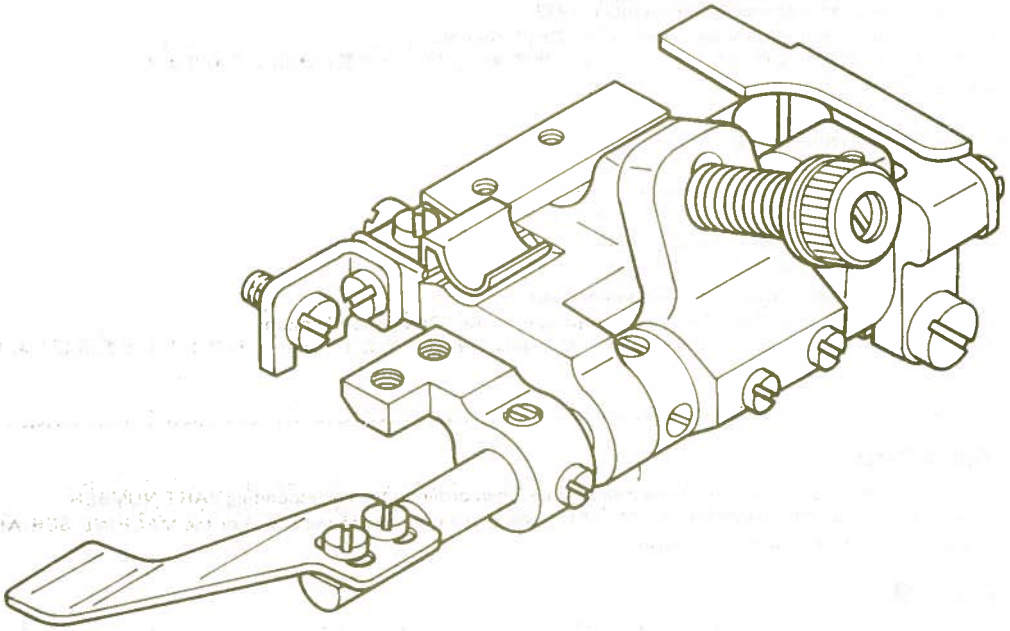

TOKYO JUKI INDUSTRIAL CO., LTD.

From the library of: Diamond Needle Corp

HOW TO MAKE USE OF THIS PARTS BOOK
パーツブックの見方

1. The part numbers of parts shown in the figure indicate the corresponding numbers (Ref. No.) shown by the Index.
   図に示された部品の品番は、図にふられているNo (Ref.No)に対応するインデックスによって、その品番がわかります。
2. Explanation of codes
   記号の説明

   1) Codes on the "Note" column
      "注記" 欄の記号

      ① ☆ ..... means this part is changed from the previous parts book.
      前回のパーツブックに対して今回変更された部品を意味します

      ② #01 ..... refer to the "Note" explanation at bottom of page.
      ◦01 ページ下の "注記" の説明を参照して下さい

   2) Codes on the "E.C. (Engineering change)" column
      "変更年月" 欄の記号

      ① A.10/83 .... Added from October, 1983
      1983年10月より追加された

      ② D.10/83 .... Obsoleted from October, 1983
      1983年10月より削除された

      ③ When previous parts (Obsoleted part) and new parts (Added parts) are not interchangeable with each other:
      部品の互換性がない変更の場合

      In this case, even obsoleted part (D.) can be ordered with the obsoleted part number, so select the parts with changed dates and place your orders.
      この場合は削除(D)された品番でもご注文できますから、変更年月により、いずれかの部品を選択してご注文下さい。

      Example (例)

Ref. No.	Note 注記	Part No. 品番	Description	E.C. 変更年月	品名	Amt. Req. 数量
1	☆	B1401-100-000	Needle bar	D.10/83	ハリボー	–
1-1	☆	B1401-100-000-A	Needle bar	A.10/83	ハリボー	1
2	☆	B1105-200-000	Frame cover	D.10/83	B1105-300-000	–
	☆	B1105-300-000	Frame cover	A.10/83	フレームカバー	1

      ④ In case when previous parts and new part are interchangeable with each other:
      部品の互換性がある場合の変更

      In this case the new part number is replaced on the " 品名 (Japanese)" column of the previous parts, so please order by the new part number.
      この場合は、旧部品の和文品名欄にそれにかわる新しい品番が記入してありますので、新しい品番でご注文下さい。

      ⑤ C.10/83

1		B1105-500-000	Frame cover	C.10/83	~~B1105-600-000~~	1
		Correct No. 正しい品番			Wrong No. 誤まり品番	

      Please order by the correct part number.
      正しい品番でご注文下さい。

      ⑥ M.10/83 ..... The amount required is changed from October, 1983
      The new amount required is shown in the "Amt. Req". column.
      1983年10月より数量が変更になった この場合数量欄には新しい数量が表示してあります。

   3) Codes on the "Amt. Req." column
      "数量" 欄の記号

      ① 2 ..... Indicates amount required is 2.
      数量、2個を表わします

      ② 2.0 ..... Indicates length in meters. (unit is meter)
      長さ、2メートルを表わします (単位はメートルです)

      ③ – ..... Indicates parts obsoleted from the parts book.
      このパーツブックから削除された部品です。

      ④ (1) ..... Indicates sub parts which construct the assembly part.
      Assembly part is shown as "asm." and クミ in Japanese, in the "Description" column.
      組部品を構成している子部品を表わします。組部品は品名欄に英文で "asm." 和文でクミと表示してあります。

When Ordering The Spare Parts:

In order to ensure that we deliver the correct parts to you, please clearly state when ordering the corresponding PART NUMBER (ex. B1109-012-A00) and also the PARTS BOOK NUMBER (ex. 0010-01, given at the top right of the cover) or the MACHINE SERIAL NUMBER, because there are some parts which have been changed.

補用部品注文の際のご注意

このパーツブックに記載されている補用部品をご注文の際は、部品の番号(例えば、B1109-012-A00)でご注文下さい。合わせて、ご覧のパーツブックの管理番号(表紙右上、例えば、No.0010-01)又は、機械番号をご連絡頂ければ幸いです。又、改良のため部品の一部が変更になる場合がありますのでご了承下さい。

From the library of: Diamond Needle Corp

CONTENTS
目　次

1. TABLE OF SWING TYPE INTERMITTENT SHIRRING ATTACHMENT 1
   スイング方式ひだ取り装置一覧表
2. SIMULTANEOUS EXCHANGING GAUGE PARTS (FOR MO-2000 SERIES) 2
   同時交換ゲージ部品（MO-2000シリーズ用）
   (1) S057, S097
   (2) S058, S098
3. S057, S058 : SWING TYPE INTERMITTENT SHIRRING ATTACHMENT (PEDAL TYPE) 3
   S057、S058：スイング方式ひだ取り装置(ペダル式)
4. S097, S098 : SWING TYPE INTERMITTENT SHIRRING ATTACHMENT (MANUAL TYPE) 5
   S097、S098：スイング方式ひだ取り装置(手動式)
5. KNEE OPERATING COMPONENTS 7
   膝作動装置関係
6. S112 : SWING TYPE UPPER INTERMITTENT SHIRRING ATTACHMENT (MANUAL/PEDAL TYPE) 9
   S112：スイング方式上ひだ取り装置(手動・ペダル式)
7. S114, S115 : SWING TYPE LOWER INTERMITTENT SHIRRING ATTACHMENT ... 11
   S114, S115：スイング方式下布ひだ取り装置
8. SIMULTANEOUS EXCHANGING GAUGE PARTS FOR MOR-2500 SERIES 12
   MOR-2500シリーズ同時交換ゲージ部品
   (1) S112
   (2) S114, S098
   (3) S115, S097

NUMERICAL INDEX 13
索引

From the library of: Diamond Needle Corp

1. TABLE OF SWING TYPE INTERMITTENT SHIRRING ATTACHMENT
スイング方式ひだ取り装置一覧表

PEDAL TYPE (For fully-sunken, semi-sunken type table) ペダル式 (全沈、半沈式テーブル用)	MANUAL TYPE (For only semi-sunken type table) 手動式 (半沈式テーブル用のみ)
S057 Intermittent shirring attachment for safety stitcher インターロックミシン用ひだ取り装置	**S097** Intermittent shirring attachment for safety stitcher インターロックミシン用ひだ取り装置
S058 Intermittent shirring attachment for overedger オーバーロックミシン用ひだ取り装置	**S098** Intermittent shirring attachment for overedger オーバーロックミシン用ひだ取り装置

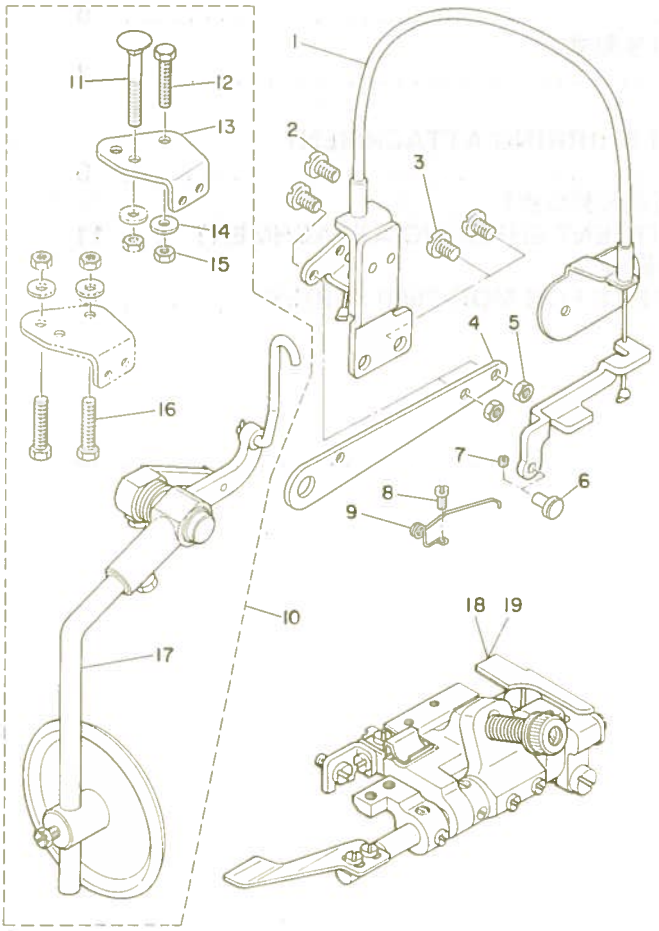

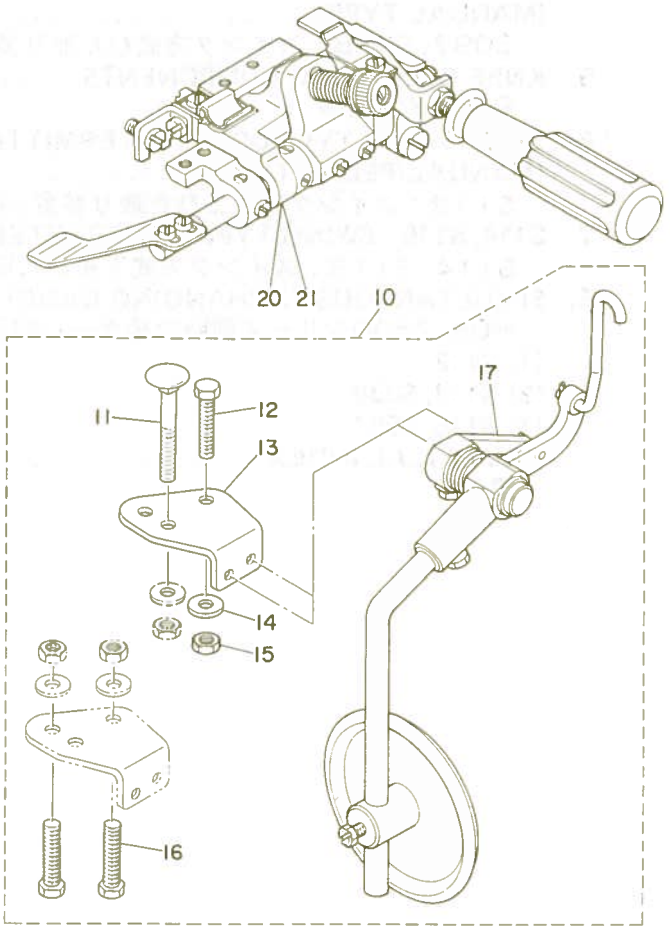

Attachment 装置品番	Constitution parts 構成品番	Attachment 装置品番	Constitution parts 構成品番
S057 MAS-057000A0	1. MAS-057050A0 2. SS-6121010-SP 3. SS-6151040-SP 4. MAS-05716000 5. NS-6120310-SP 6. MAS-05714000 7. SS-8090410-SP 8. SS-6110610-TP 9. MAS-05715000 10. MAS-107010A0 11. MAS-10704000 12. SM-9083013-SC 13. MAS-10701000 14. WP-0850002-SC 15. NM-6080600-SM 16. SM-9084533-SC 17. MAS-107010C0 18. MAS-057010A0	**S097** MAS-097000A0	10. MAS-107010A0 11. MAS-10704000 12. SM-9083013-SC 13. MAS-10701000 14. WP-0850002-SC 15. NM-6080600-SM 16. SM-9084533-SC 17. MAS-107010C0 20. MAS-097010A0
S058 MAS-058000A0	1 ~ 17 19. MAS-058010A0	**S098** MAS-098000A0	10 ~ 17 21. MAS-098010A0

Series \ Attachment	S057	S058	S097	S098
MO-2400 MO-2500	MO-2416, MO-2516 BD4, DD4, FF6, RH6 DD6. -320	MO-2404-0D6-320 MO-2414-BD6-320 MO-2504-0D6-320 MO-2514-BD6-320	MO-2416, MO-2516 BD4, DD4, FF6, RH6 DD6. -320/S097 MOR-2516-FF6	MO-2404-0D6-320 MO-2414-BD6-320 MO-2504-0D6-320 MO-2514-BD6-320 MOR-2514-BD6

From the library of: Diamond Needle Corp

2. SIMULTANEOUS EXCHANGEING GAUGE PARTS
同時交換ゲージ部品

(1) S057, S097

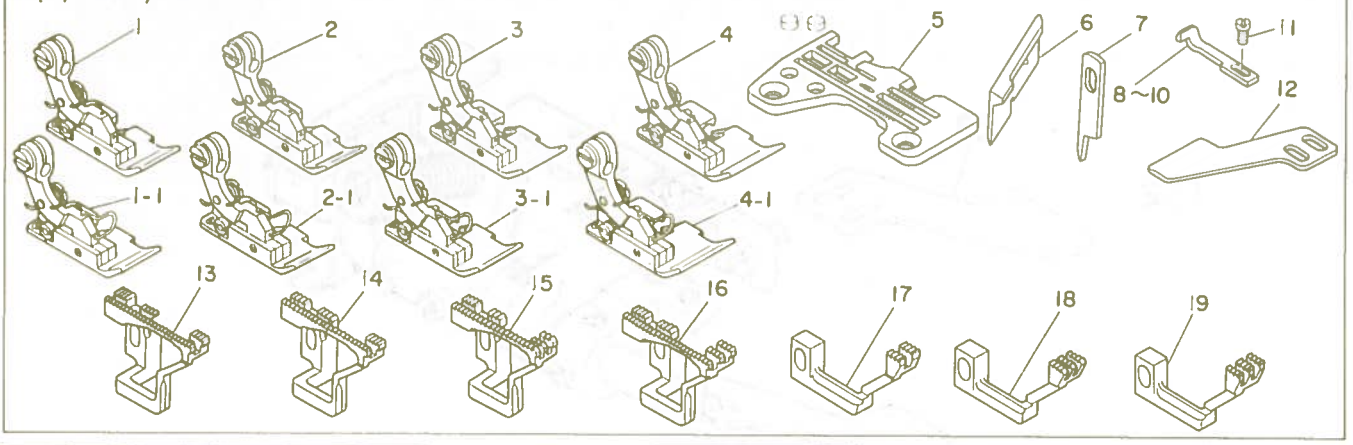

Ref. No.	Note 注記	Part No. 品番	Description	E. C. 変更年月	品名	Amt. Req. 数量
1	◇01	118-79558	PRESSER FOOT ASM.		オサエ クミ	1
1-1	◇15	118-79566	PRESSER FOOT ASM.	A.02/84	ジュウオサエクミ (ユビガードツキ)	1
2	◇02	118-79657	PRESSER FOOT ASM.		オサエ クミ	1
2-1	◇15	118-79665	PRESSER FOOT ASM.	A.02/84	ジュウオサエクミ (ユビガードツキ)	1
3	◇04	118-80457	PRESSER FOOT ASM.		オサエ クミ	1
3-1	◇15	118-80465	PRESSER FOOT ASM.	A.02/84	ジュウオサエクミ (ユビガードツキ)	1
4	◇07	118-80853	PRESSER FOOT ASM.		オサエ クミ	1
4-1	◇15	118-80861	PRESSER FOOT ASM.	A.02/84	ジュウオサエクミ (ユビガードツキ)	1
5	◇04	R4612-H0F-B00	THROAT PLATE		ハリイタ	1
6	◇05	118-45807	UPPER KNIFE	C.11/84	118-45906	1
7	◇05	118-45609	KNIFE		ヒラメス	1
8	◇06	B4120-816-D0B-A	NEEDLE GUARD		ハリウケ E	1
9	◇04	B4120-816-F0C-A	NEEDLE GUARD		ハリウケ E	1
10	◇07	B4120-816-R0A	NEEDLE GUARD		ハリウケ	1
11	◇08	SS-7060610-SP	SCREW 3/32-56 L= 5.5		マルヒラネジ 3/32-56 L=5.5	1
12	◇07	MAS-0510800A	INTERMITTENT SHIRRING PRESSER PLATE		ヒダトリオサエ	1
13	◇09	118-83709	MAIN FEED DOG		シュオクリハ	1
14	◇10	118-83808	MAIN FEED DOG		シュオクリハ	1
15	◇11	118-83907	MAIN FEED DOG		シュオクリハ	1
16	◇03	118-84103	MAIN FEED DOG		シュオクリハ	1
17	◇05	118-85704	DIFFERENTIAL FOOD DOG		フクオクリハ	1
18	◇11	118-85803	DIFFERENTIAL FOOD DOG		フクオクリハ	1
19	◇03	118-85902	DIFFERENTIAL FEED DOG		フクオクリハ	1

- The same throat plate can be used independent of other replacement (except FF6)
  針板については交換する必要はありません(FF6を除いて)
- Each notes apply also to model MO-2416, MO-2516
  各注記についてはMO-2416, MO-2516それぞれ共通

Note (注記)
- ◇01 ..... For BD4-320 — BD4-320用
- ◇02 ..... For DD4-320, DD6-320 — DD4-320, DD6-320用
- ◇03 ..... For FF6-320, RH6-320 — FF6-320, RH6-320用
- ◇04 ..... For FF6-320 — FF6-320用
- ◇05 ..... For BD4-320, DD4-320 — BD4-320, DD4-320用
- ◇06 ..... For BD4-320, DD4-320 — BD4-300, DD4-320用
- ◇07 ..... For RH6-320 — RH6-320用
- ◇08 ..... For S057, S097 — S057, S097用
- ◇09 ..... For BD4-320 — BD4-320用
- ◇10 ..... For DD4-320 — DD4-320用
- ◇11 ..... For DD6-320 — DD6-320用
- ◇15 ..... For export — 輸出用

(2) S058, S098

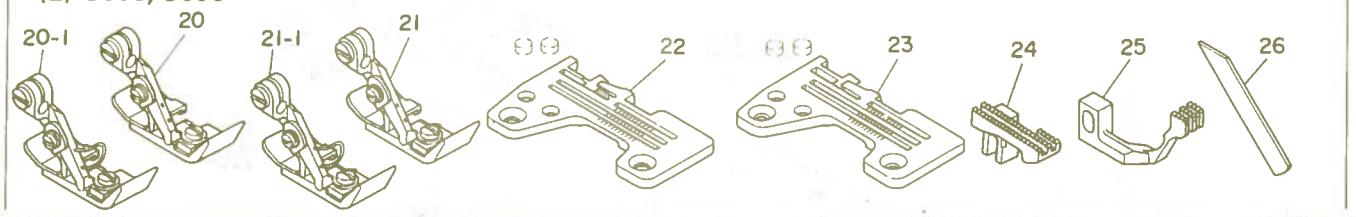

Ref No.	Note 注記	Part No 品番	Description	E. C. 変更年月	品名	Amt. Req. 数量
20	◇13	118-79350	PRESSER FOOT ASM.		オサエ クミ	1
20-1	◇15	118-79368	PRESSER FOOT ASM.	A.02/84	オサエクミ (ユビガードツキ)	1
21	◇12	118-78857	PRESSER FOOT ASM.		オサエ クミ	1
21-1	◇15	118-78865	PRESSER FOOT ASM.	A.02/84	オサエクミ (ユビガードツキ)	1
22	◇13	R4305-H0D-E0A	THROAT PLATE		ハリイタ	1
23	◇12	R4300-H0D-D0A	THROAT PLATE		ハリイタ	1
24	◇14	118-83402	MAIN FEED DOG		シュオクリハ	1
25	◇14	B1657-814-B0L	DIFFERENTIAL FEED DOG		フクオクリハ	1
26	◇12	118-97501	LOWER KNIFE		シタメス B	1

Note (注記)
- ◇12 ..... For 0D6-320 (MO-2404, 2414, 2504, 2514) — 0D6-320用 (MO-2404, 2414, 2504, 2514)
- ◇13 ..... For BD6-320 (MO-2404, 2504, 2514) — BD6-320用 (MO-2404, 2414, 2504, 2514)
- ◇14 ..... For S058, S098 (MO-2404, 2414, 2504, 2514) — S058, S098用 (MO-2404, 2414, 2504, 2514)
- ◇15 ..... For export — 輸出用

From the library of: Diamond Needle Corp

3. S057, S058 : SWING TYPE INTERMITTENT SHIRRING ATTACHMENT (PEDAL TYPE)
S057、S058：スインク方式ひだ取り装置(ペダル式)

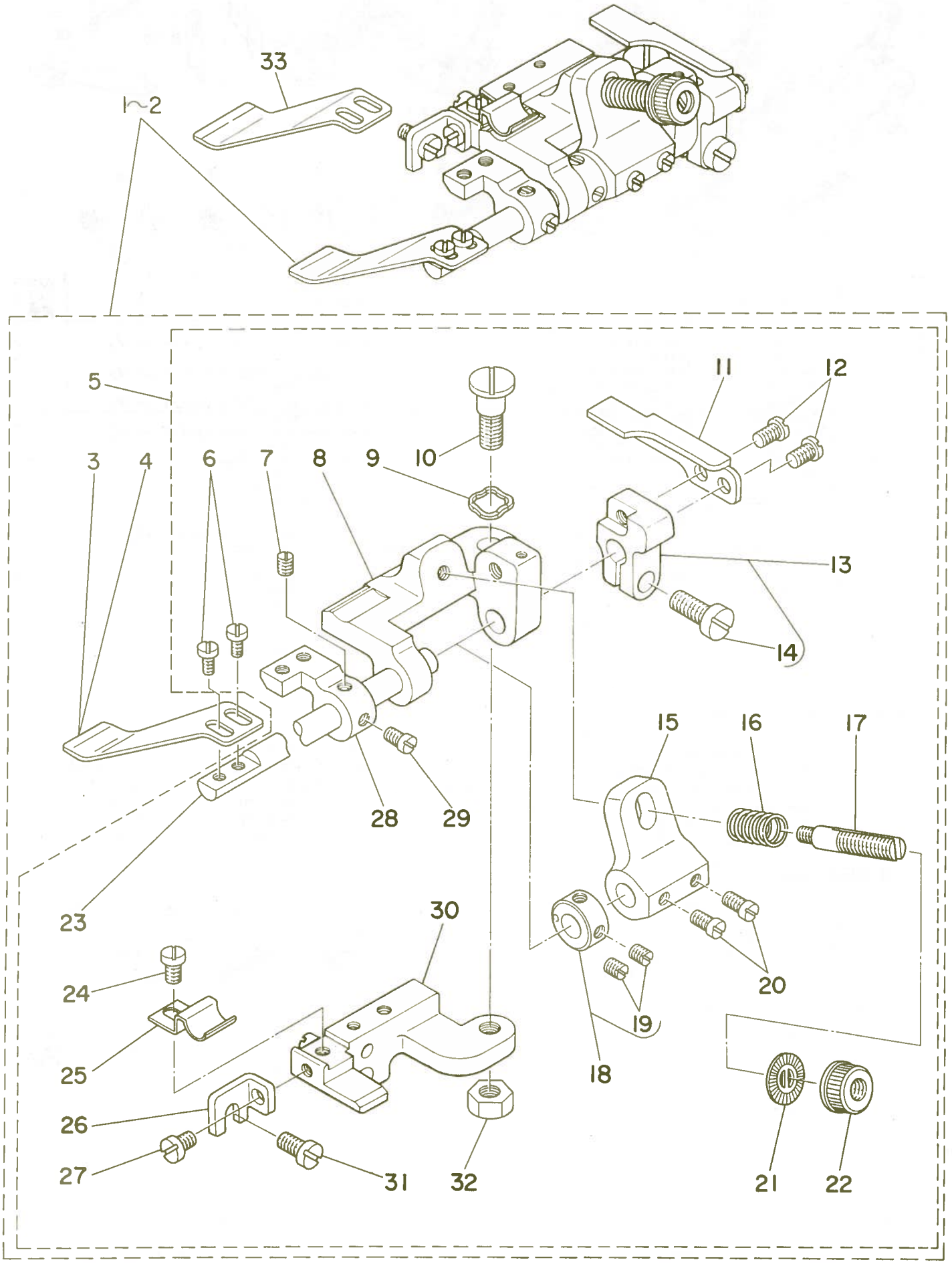

From the library of: Diamond Needle Corp

Ref. No.	Note 注記	Part No. 品番	Description	E. C. 変更年月	品名	Amt. Req. 数量
1	◇01	MAS-057010A0	PEDAL SHIRRING ATTACHMENT ASM.		ﾋﾀﾞﾄﾘｿｳﾁ ｸﾐ	1
2	◇02	MAS-058010A0	PEDAL SHIRRING ATTACHMENT ASM.		ﾋﾀﾞﾄﾘｿｰﾁ ｸﾐ	1
3	◇01	MAS-05108000	INTERMITTENT SHIRRING PRESSER PLATE		ﾋﾀﾞﾄﾘｵｻｴ	(1)
4	◇02	MAS-05208000	INTERMITTENT SHIRRING PLATE		ﾋﾀﾞﾄﾘｵｻｴ	(1)
5		MAS-057010B0	PEDAL SHIRRING ATTACHMENT ASM.		ﾋﾀﾞﾄﾘｿｰﾁ ｸﾐ	(1)
6		SS-6090650-SP	SCREW 9/64-40 L=6		ﾋﾗﾈｼﾞ 9/64-40 L=6	(2)
7		SS-8110520-TP	SCREW 11/64-40 L= 4.5		ﾄﾒﾈｼﾞ 11/64-40 L=4.5	(1)
8		MAS-05702000	SWING BASE		ﾋﾀﾞﾄﾘｵｻｴ ｼｼﾞﾀﾞｲ	(1)
9		WZ-0850302-K0	WAVED WASHER 8.5X13X0.3		ﾅﾐｶﾞﾀｻﾞｶﾞﾈ 8.5X12.5X0.3	(1)
10		SD-0790801-SP	HINGE SCREW D=7.94 H=8		ﾀﾞﾝﾈｼﾞ D=7.94 H=8	(1)
11		MAS-05703000	LIFTING ARM		ﾋｷｱｹﾞｳﾃﾞ	(1)
12		SS-7110710-SP	SCREW 11/64-40 L=7		ﾏﾙﾋﾗﾈｼﾞ 11/64-40 L=7	(2)
13		MAS-052070A0	LIFTING ARM MOUNTING BLOCK ASM.,A		ﾋｷｱｹﾞｳﾃﾞ ﾄﾘﾂｹﾀﾞｲ ｸﾐ	(1)
14		SS-6151440-SP	SCREW 15/64-28 L=14		ﾋﾗﾈｼﾞ 15/64-28 L=14	(1)
15		MAS-05204000	APM		ﾋﾀﾞﾄﾘｵｻｴ ﾊﾞﾈｳﾃﾞ	(1)
16		MAS-05205000	SPRING		ﾋﾀﾞﾄﾘｵｻｴﾊﾞﾈ	(1)
17		B3105-804-000	TENSION POST		ｲﾄﾁｮｰｼﾎﾟｰ	(1)
18		CS-079081A-SP	THRUST COLLAR ASM. D=7.94 W=8		ｽﾗｽﾄｳｹ D=7.94 W=8	(1)
19		SS-8110520-TP	SCREW 11/64-40 L= 4.5		ﾄﾒﾈｼﾞ 11/64-40 L=4.5	(2)
20		SS-6110710-TP	SCREW 11/64-40 L= 6.5		ﾋﾗﾈｼﾞ 11/64-40 L=6.5	(2)
21		B3120-125-000	TENSION DISC STOPPER		ｲﾄﾁｮｰｼｻﾗ ｶｲﾃﾝﾄﾞﾒ	(1)
22		B3116-125-000	TENSION NUT		ｲﾄﾁｮｰｼ ﾅﾂﾄ	(1)
23		MAS-05206000	SHAFT		ﾋﾀﾞﾄﾘｼﾞｸ	(1)
24		SS-7110710-SP	SCREW 11/64-40 L=7		ﾏﾙﾋﾗﾈｼﾞ 11/64-40 L=7	(1)
25		MAS-05209000	SPRING		ﾋﾀﾞﾄﾘｵｻｴ ｼｼﾞﾀﾞｲﾊﾞﾈ	(1)
26		MAS-05704000	SWING BASE ROTATING STOPPER		ﾋﾀﾞﾄﾘｵｻｴ ﾄﾘﾂｹﾀﾞｲ ﾏﾜﾘﾄﾞﾒ	(1)
27		SS-7110510-SP	SCREW 11/64-40 L=5		ﾏﾙﾋﾗﾈｼﾞ 11/64-40 L= 5	(1)
28		MAS-05212000	PIPING MOUNTING BLOCK		ﾊﾟｲﾋﾟﾝｸﾞ ﾄﾘﾂｹﾀﾞｲ	(1)
29		SS-6110650-TP	SCREW 11/64-40 L=5.5		ﾋﾗﾈｼﾞ 11/64-40 L=5.5	(1)
30		MAS-057010C0	PRESSER PLATE BASE ASM.		ﾋﾀﾞﾄﾘｵｻｴ ﾄﾘﾂｹﾀﾞｲ ｸﾐ	(1)
31		SS-6120940-SP	SCREW 3/16-28 L=9		ﾋﾗﾈｼﾞ 3/16-28 L=9	(1)
32		NS-6160520-SP	NUT 1/4-24		ﾛｯｶｸﾅﾂﾄ 1/4-24	(1)
33	◇03	MAS-0510800A	INTERMITTENT SHIRRING PRESSER PLATE		ﾋﾀﾞﾄﾘｵｻｴ	1

Note (注記) ◇01 ..... For S057 S057用
◇02 ..... For S058 S058用
◇03 ..... For RH6-320 RH6-320用

From the library of: Diamond Needle Corp

4. S097, S098 : SWING TYPE INTERMITTENT SHIRRING ATTACHMENT (MANUAL TYPE)
S097、S098：スイング方式ひだ取り装置(手動式)

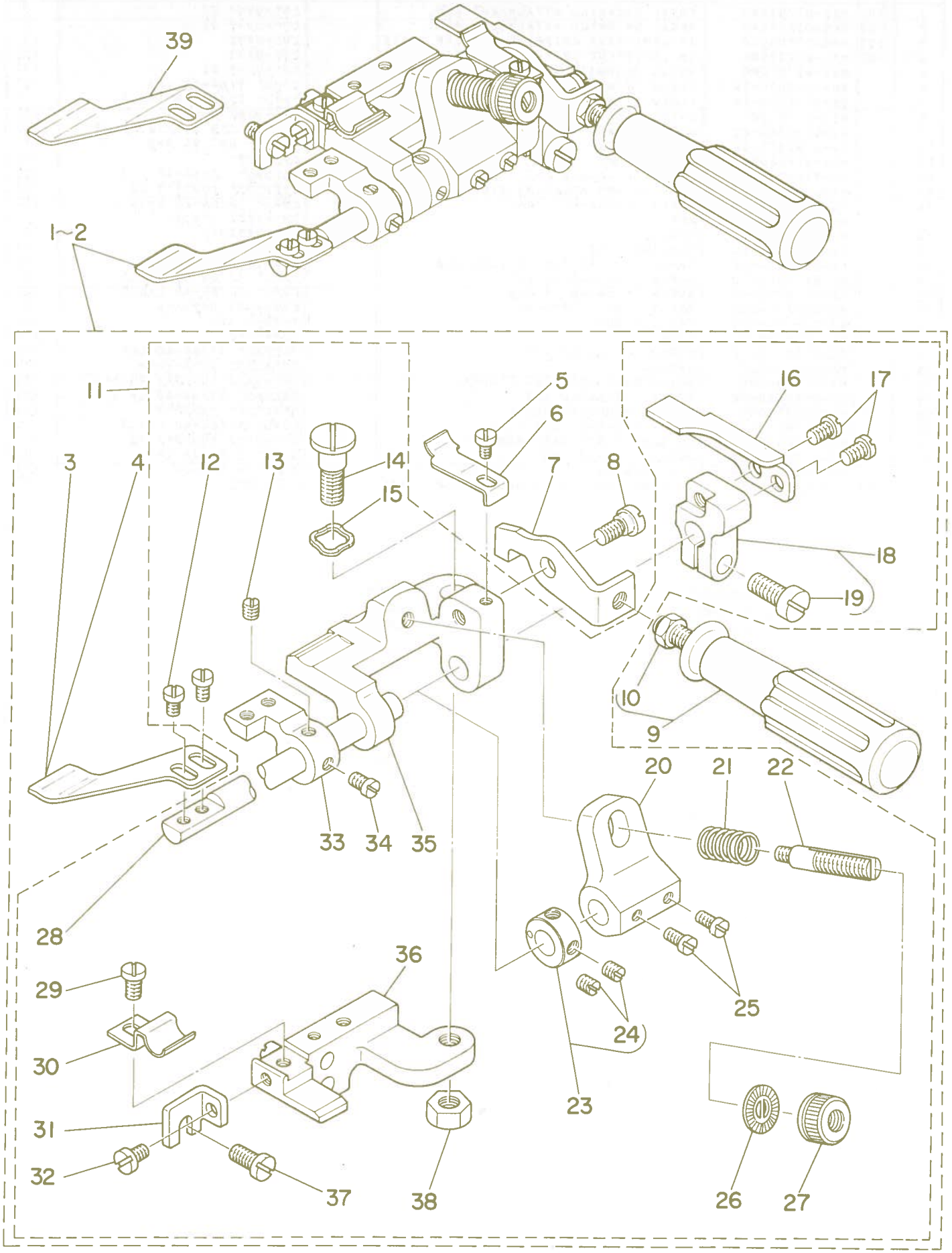

From the library of: Diamond Needle Corp

Ref. No.	Note 注記	Part No. 品番	Description	E. C. 変更年月	品名	Amt. Req. 数量
1	◇01	MAS-097010A0	MANUAL SHIRRING ATTACHMENT ASM		ｼｭﾄﾞｰ ﾋﾀﾞﾄﾘｿｰﾁ ｸﾐ	1
2	◇02	MAS-098010A0	MANUAL SHIRRING ATTACHMENT ASM		ｼｭﾄﾞｰ ﾋﾀﾞﾄﾘｿｰﾁ ｸﾐ	1
3	◇01	MAS-05108000	INTERMITTENT SHIRRING PRESSER PLATE		ﾋﾀﾞﾄﾘｵｻｴ	(1)
4	◇02	MAS-05208000	INTERMITTENT SHIRRING PLATE		ﾋﾀﾞﾄﾘｵｻｴ	(1)
5		SS-7090520-SP	SCREW 9/64-40 L= 4.5		ﾏﾙﾋﾗﾈｼﾞ 9/64-40 L=4.5	(1)
6		MAS-09203000	SPRING PLATE		ｼｭﾄﾞｰﾚﾊﾞｰﾊﾞﾈ	(1)
7		MAS-09201000	MANUAL LEVER ARM		ｼｭﾄﾞｰﾚﾊﾞｰｳﾃﾞ	(1)
8		SD-0640322-TP	HINGE SCREW D= 6.35 H= 3.2		ﾀﾞﾝﾈｼﾞ D=6.35 H=3.2	(1)
9		MAS-092020A0	MANUAL LEVER ASM.		ｼｭﾄﾞｰﾚﾊﾞｰ ｸﾐ	(1)
10		NS-6150310-SP	NUT 15/64-28		ﾛｯｶｸﾅｯﾄ 15/64-28	(1)
11		MAS-057010B0	PEDAL SHIRRING ATTACHMENT ASM.		ﾋﾀﾞﾄﾘｿｰﾁ ｸﾐ	(1)
12		SS-6090650-SP	SCREW 9/64-40 L=6		ﾋﾗﾈｼﾞ 9/64-40 L=6	(2)
13		SS-8110520-TP	SCREW 11/64-40 L= 4.5		ﾄﾒﾈｼﾞ 11/64-40 L=4.5	(1)
14		SD-0790801-SP	HINGE SCREW D=7.94 H=8		ﾀﾞﾝﾈｼﾞ D=7.94 H=8	(1)
15		WZ-0850302-K0	WAVED WASHER 8.5X13X0.3		ﾅﾐｶﾞﾀｻﾞｶﾞﾈ 8.5X12.5X0.3	(1)
16		MAS-05703000	LIFTING ARM		ﾋｷｱｹﾞｳﾃﾞ	(1)
17		SS-7110710-SP	SCREW 11/64-40 L=7		ﾏﾙﾋﾗﾈｼﾞ 11/64-40 L=7	(2)
18		MAS-052070A0	LIFTING ARM MOUNTING BLOCK ASM.,A		ﾋｷｱｹﾞｳﾃﾞ ﾄﾘﾂｹﾀﾞｲ ｸﾐ	(1)
19		SS-6151440-SP	SCREW 15/64-28 L=14		ﾋﾗﾈｼﾞ 15/64-28 L=14	(1)
20		MAS-05204000	ARM		ﾋﾀﾞﾄﾘｵｻｴ ﾊﾞﾈｳﾃﾞ	(1)
21		MAS-05205000	SPRING		ﾋﾀﾞﾄﾘｵｻｴﾊﾞﾈ	(1)
22		B3105-804-000	TENSION POST		ｲﾄﾁｮｰｼﾎﾞｰ	(1)
23		CS-079081A-SP	THRUST COLLAR ASM. D=7.94 W=8		ｽﾗｽﾄｳｹ D=7.94 W=8	(1)
24		SS-8110520-TP	SCREW 11/64-40 L= 4.5		ﾄﾒﾈｼﾞ 11/64-40 L=4.5	(2)
25		SS-6110710-SP	SCREW 11/64-40 L=7		ﾋﾗﾈｼﾞ	(2)
26		B3120-125-000	TENSION DISC STOPPER		ｲﾄﾁｮｰｼｻﾗ ｶｲﾃﾝﾄﾞﾒ	(1)
27		B3116-125-000	TENSION NUT		ｲﾄﾁｮｰｼ ﾅﾂﾄ	(1)
28		MAS-05206000	SHAFT		ﾋﾀﾞﾄﾘｼﾞｸ	(1)
29		SS-7110710-SP	SCREW 11/64-40 L=7		ﾏﾙﾋﾗﾈｼﾞ 11/64-40 L=7	(1)
30		MAS-05209000	SPRING		ﾋﾀﾞﾄﾘｵｻｴ ｼｼﾞﾀﾞｲﾊﾞﾈ	(1)
31		MAS-05704000	SWING BASE ROTATING STOPPER		ﾋﾀﾞﾄﾘｵｻｴ ﾄﾘﾂｹﾀﾞｲ ﾏﾜﾘﾄﾞﾒ	(1)
32		SS-7110510-SP	SCREW 11/64-40 L=5		ﾏﾙﾋﾗﾈｼﾞ 11/64-40 L= 5	(1)
33		MAS-05212000	PIPING MOUNTING BLOCK		ﾊﾟｲﾋﾟﾝｸﾞ ﾄﾘﾂｹﾀﾞｲ	(1)
34		SS-6110650-TP	SCREW 11/64-40 L=5.5		ﾋﾗﾈｼﾞ 11/64-40 L=5.5	(1)
35		MAS-05702000	SWING BASE		ﾋﾀﾞﾄﾘｵｻｴ ｼｼﾞﾀﾞｲ	(1)
36		MAS-057010C0	PRESSER PLATE BASE ASM.		ﾋﾀﾞﾄﾘｵｻｴ ﾄﾘﾂｹﾀﾞｲ ｸﾐ	(1)
37		SS-6120940-SP	SCREW 3/16-28 L=9		ﾋﾗﾈｼﾞ 3/16-28 L=9	(1)
38		NS-6160520-SP	NUT 1/4-24		ﾛｯｶｸﾅｯﾄ 1/4-24	(1)
39	◇03	MAS-0510800A	INTERMITTENT SHIRRING PRESSER PLATE		ﾋﾀﾞﾄﾘｵｻｴ	1

Note (注記) ◇01 ..... For S097 — S097用
◇02 ..... For S098 — S098用
◇03 ..... For RH6-320/S097 — RH6-320 S097

From the library of: Diamond Needle Corp

5. KNEE OPERATING COMPONENTS
膝作動装置関係

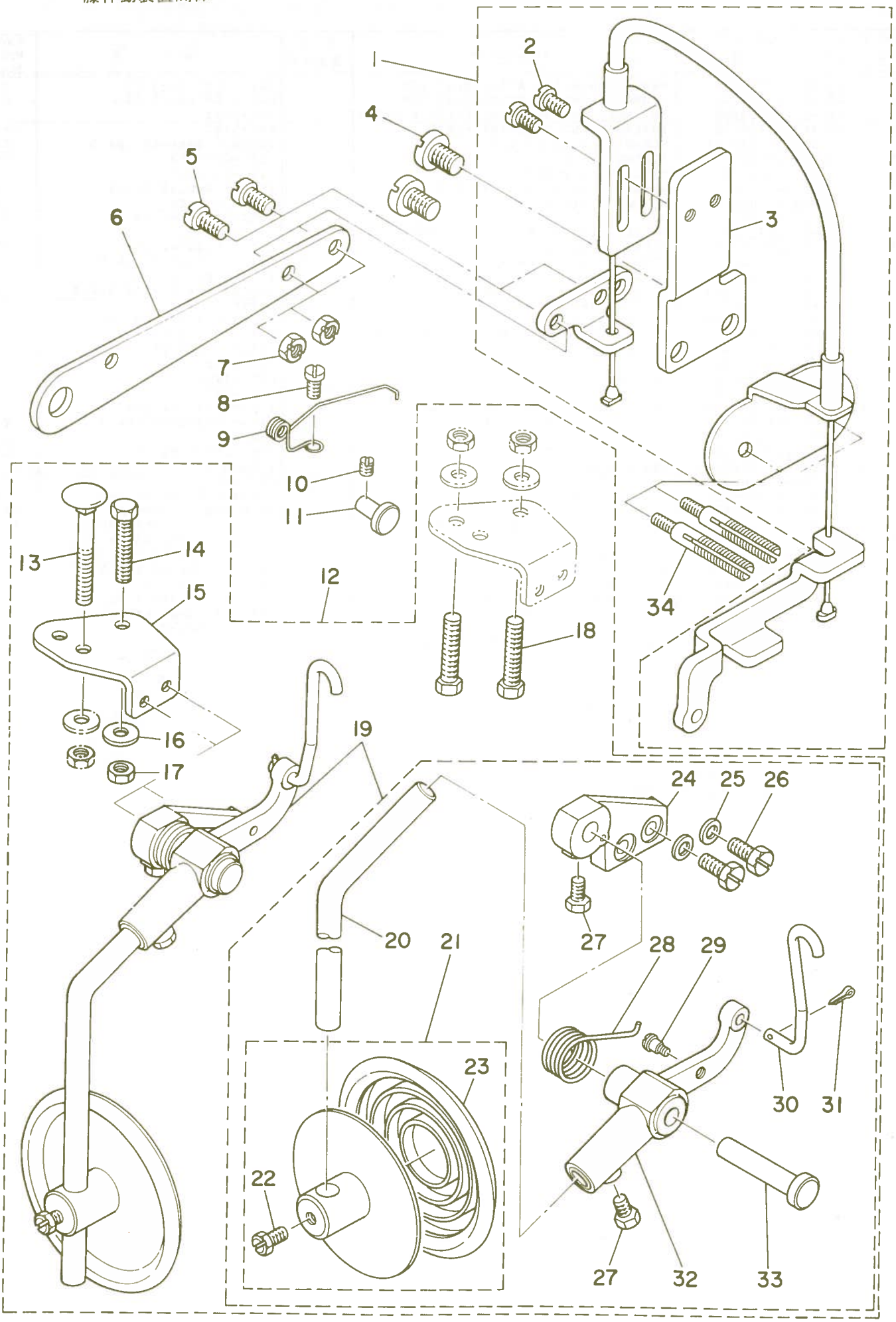

From the library of: Diamond Needle Corp

Ref. No.	Note 注記	Part No. 品番	Description	E. C. 変更年月	品名	Amt. Req. 数量
1		MAS-057050A0	WIRE ASM.		ﾜｲﾔｰ ｸﾐ	1
2		SS-7110710-SP	SCREW 11/64-40 L=7		ﾏﾙﾋﾗﾈｼﾞ 11/64-40 L=7	(2)
3		MAS-05710000	WIRE STOPPER SUPPORTER		ﾜｲﾔｰｽﾄｯﾊﾟｰ ｻｻｴｲﾀ	(1)
4		SS-6151040-SP	SCREW 15/64-28 L=10		ﾋﾗﾈｼﾞ 15/64-28 L=10	2
5		SS-6121010-SP	SCREW 3/16-28 L=10		ﾋﾗﾈｼﾞ 3/16-28 L=10	2
6		MAS-05716000	LIFTING LEVER ASM.		ｵｻｴｱｹﾞﾚﾊﾞｰ	1
7		NS-6120310-SP	NUT 3/16-28		ﾛｯｶｸﾅｯﾄ 3/16-28	2
8		SS-6110610-TP	SCREW 11/64-40 L=6		ﾋﾗﾈｼﾞ 11/64-40 L=6	1
9		MAS-05715000	SPRING		ﾋｷｱｹﾞﾚﾊﾞｰ ﾊﾞﾈ	1
10		SS-8090410-SP	SCREW 9/64-40 L= 3.5		ﾄﾒﾈｼﾞ 9/64-40 L=3.5	1
11		MAS-05714000	PIN		ﾋｷｱｹﾞﾚﾊﾞｰ ﾋﾝｼﾞｸ	1
12		MAS-107010A0	KNEE OPERATING DEVICE ASM.	C.05/84	MAS-107010C0	1
13		MAS-10704000	BOLT		ｳｹｲﾀﾎﾞﾙﾄ	(1)
14	#01	SM-9083013-SC	SCREW M8 L=30		ﾛｯｶｸﾎﾞﾙﾄ M8 L=30	(1)
15		MAS-10701000	INSTALLING PLATE		ﾋｻﾞｱｹﾞﾚﾊﾞｰﾀﾞｲ ﾄﾘﾂｹｲﾀ	(1)
16	#01	WP-0850002-SC	WASHER 8.5X18X1.6		ﾋﾗｻﾞｶﾞﾈ 8.5X18X1.6	(1)
17	#01	NM-6080600-SM	NUT M8		ﾛｯｶｸﾅｯﾄ M8 10X11.5	(1)
18	#02	SM-9084533-SC	SCREW M8 L=45		ﾛｯｶｸﾎﾞﾙﾄ M8 L=45	(2)
19		MAS-107010C0	KNEE PRESS PLATE ASM.	C.05/84	MAS-107010A0	(1)
20		MAS-10702000	ROD		ﾋｻﾞｱｹﾞｼﾞｸ	(1)
21		B3430-552-0A0	KNEE PRESS PLATE ASM.		ﾋｻﾞｱﾃｲﾀ ｸﾐ	(1)
22		SS-9061230-CP	SCREW 1/4-40 L=12		ﾛｯｶｸﾎﾞﾙﾄ 1/4-40 L=12	(1)
23		B3431-552-000-A	KNEE PRESS PLATE COVER		ﾋｻﾞｱﾃｲﾀ ｶﾊﾞｰ	(1)
24		MAS-10501000	LEVER INSTALLING BASE		ﾋｻﾞｱｹﾞﾚﾊﾞｰﾀﾞｲ	(1)
25		WP-0740510-SP	WASHER 7.4X11.8X0.5		ﾋﾗｻﾞｶﾞﾈ 7.4X11.8X0.5	(2)
26		SS-9081610-TP	SCREW 9/32-28 L=16		ﾛｯｶｸﾎﾞﾙﾄ 9/32-28 L=16	(2)
27		SS-9151220-SR	SCREW 15/64-28 L=12		ﾛｯｶｸﾎﾞﾙﾄ 15/64-28 L=12	(1)
28		MAS-10503000	SPRING		ﾋｻﾞｱｹﾞﾚﾊﾞｰﾊﾞﾈ	(1)
29		SD-0550501-SP	HINGE SCREW D=5.5 H=5		ﾀﾞﾝﾈｼﾞ D=5.5 H=5	(1)
30		MAS-10703000	CONNECTING ROD		ﾋｻﾞｱｹﾞ ﾚﾝｹﾂﾎﾞｰ	(1)
31		PO-0201000-00	SPLIT PIN 2X10		ﾜﾘﾋﾟﾝ 1.6X10	(1)
32		MAS-10502000	LEVER		ﾋｻﾞｱｹﾞﾚﾊﾞｰ	(1)
33		MAS-10504000	PIN		ﾋｻﾞｱｹﾞﾚﾊﾞｰｼﾞｸ	(1)
34		MAS-05717000	TENSION POST	A.02/84	ｲﾄﾁｮｳｼﾎﾞｳ	2

Note (注記) ◇01 ..... For semi-sunken type table 半沈式テーブル用
◇02 ..... For fully-sunken type table 全沈式テーブル用

From the library of: Diamond Needle Corp

6. S112 : SWING TYPE UPPER INTERMITTENT SHIRRING ATTACHMENT (MANUAL/PEDAL TYPE)

S112：スイング方式上ひだ取り装置(手動・ペダル式)

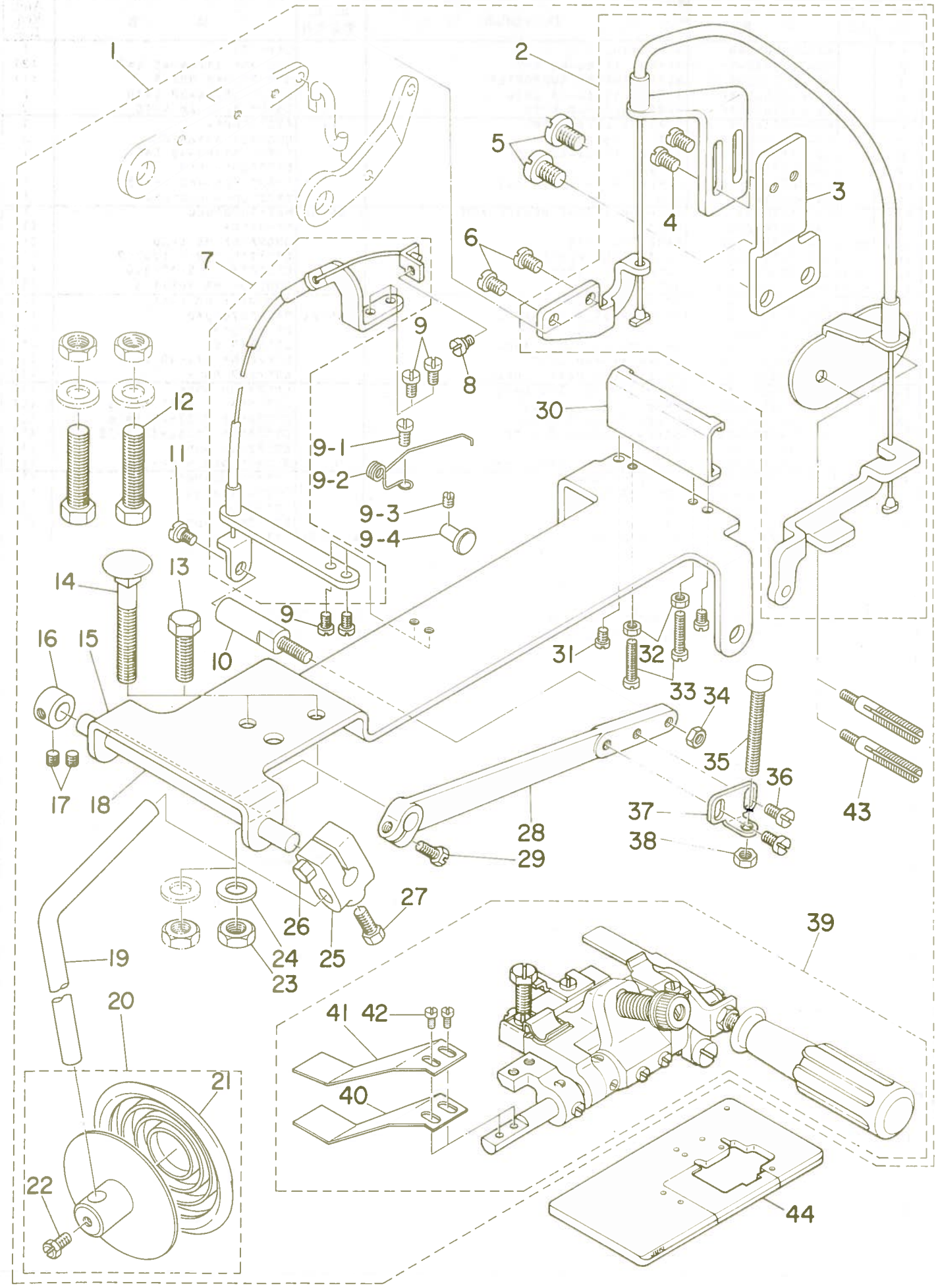

From the library of: Diamond Needle Corp

Ref. No.	Note 注記	Part No. 品番	Description	E. C. 変更年月	品名	Amt. Req. 数量
1		MAS-112000A0	UPPER SHIRRING ATTACHMENT ASM.		ウワヒダトリソーチ クミ	1
2		MAS-112120A0	LIFTING WIRE ASM.		オサエアケワイヤ	(1)
3		MAS-05710000	WIRE STOPPER SUPPORTER		ワイヤーストツパ゛R ササエイタ	(1)
4		SS-7110710-SP	SCREW 11/64-40 L=7		マルヒラネジ゛ 11/64-40 L=7	(2)
5		SS-6151040-SP	SCREW 15/64-28 L=10		ヒラネジ゛ 15/64-28 L=10	(2)
6		SS-7110710-SP	SCREW 11/64-40 L=7		マルヒラネジ゛ 11/64-40 L=7	(2)
7		MAS-112010A0	WIRE ASM.		ワイヤ クミ	(1)
8		SD-0500251-SP	HINGE SCREW D= 5 H= 2.5		ダンネジ゛ D=5 H=2.5	(1)
9		SS-7110710-SP	SCREW 11/64-40 L=7		マルヒラネジ゛ 11/64-40 L=7	(4)
9-1		SS-6110610-TP	SCREW 11/64-40 L=6	A.05/84	ヒラネジ゛ 11/64-40 L=6	(1)
9-2		MAS-05715000	SPRING	A.05/84	ヒキアケ゛レバ゛ー バ゛ネ	(1)
9-3		SS-8090410-SP	SCREW 9/64-40 L= 3.5	A.05/84	トメネジ゛ 9/64-40 L=3.5	(1)
9-4		MAS-05714000	PIN	A.05/84	ヒキアケ゛レバ゛ー ヒンジ゛シ゛ク	(1)
10		MAS-11206000	SHAFT A		ヒダ゛トリシ゛ク A	(1)
11		SD-0640321-SP	HINGE SCREW D= 6.35 H= 3.2		ダンネジ゛ D=6.35 H=3.2	(1)
12	#02	SM-9084533-SC	SCREW M8 L=45		ロツカクボルト M8 L=45	(2)
13	#01	SM-9083013-SC	SCREW M8 L=30		ロツカクボルト M8 L=30	(1)
14	#01	MAS-10704000	BOLT		ウケイタボルト	(1)
15		MAS-11211000	LEVER BASE		ヒサ゛アケ゛ レバ゛ーダイ	(1)
16		CS-1111019-SP	THRUST COLLAR D=11.11 W=10		スラストウケ D=11.11 W=10	(1)
17		SS-8660330-SP	SCREW 1/4-40 L= 3.0		トメネジ゛ 1/4-40 L=3	(2)
18		MAS-11209000	SHAFT B		ヒダ゛トリシ゛ク B	(1)
19		MAS-10702000	ROD		ヒサ゛アケ゛シ゛ク	(1)
20		B3430-552-0A0	KNEE PRESS PLATE ASM.		ヒサ゛アテイタ クミ	(1)
21		B3431-552-000-A	KNEE PRESS PLATE COVER		ヒサ゛アテイタ カバ゛ー	(1)
22		SS-9661230-CP	SCREW 1/4-40 L=12		ロツカクボルト 1/4-40 L=12	(1)
23	#01	NM-6080600-SM	NUT M8		ロツカクナツト M8 10X11.5	(1)
24	#01	WP-0850002-SC	WASHER 8.5X18X1.6		ヒラサ゛カ゛ネ 8.5X18X1.6	(1)
25		B3427-122-000	KNEE PRESS ROD MOUNTING BRACKET		ヒサ゛アテ タテシ゛ク トリツケウテ゛	(1)
26		SS-9182010-SN	SCREW 9/32-20 L=20		ロツカクボルト 9/32-20 L=20	(1)
27		SS-9181520-CP	SCREW 9/32-20 L=15.0		ロツカクボルト 9/32-20 L=15	(1)
28		MAS-11207000	ARM		ヒダ゛トリウテ゛	(1)
29		SS-9661610-CP	SCREW 1/4-40 L=16		ロツカクボルト 1/4-40 L=16	(1)
30		MAS-11210000	LEVER BASE SUPPORT		ヒサ゛アケ゛ レバ゛ーダイササエ	(1)
31		SS-7110710-SP	SCREW 11/64-40 L=7		マルヒラネジ゛ 11/64-40 L=7	(2)
32		NS-6110310-SP	NUT 11/64-40		ロツカクナツト 11/64-40	(2)
33		SS-7112420-SP	SCREW 11/64-40 L=24		マルヒラネジ゛ 11/64-40 L=24	(2)
34		NS-6150310-SP	NUT 15/64-28		ロツカクナツト 15/64-28	(1)
35		GAK-01003B00	PRESSER LIFTER STOPPER B		オサエアケ゛ ストツパ゛ー B	(1)
36		SS-7151210-SP	SCREW 15/64-28 L=12		マルヒラネジ゛ 15/64-28 L=12	(2)
37		MAS-11208000	STPPER BASE		ヒダ゛トリ ストツパ゛ダイ	(1)
38		NM-6060003-SC	NUT M6		ロツカクナツト M6 3シユ	(1)
39		MAS-112140A0	UPPER SHIRRING ATTACHMENT ASM.		ヒダ゛トリソーチ クミ	(1)
40		MAS-11214000	SEPARATING PLATE A		ブンリイタ A	(1)
41		MAS-11215000	SEPARATING PLATE B		ブンリイタ B	(1)
42		SS-6090650-SP	SCREW 9/64-40 L=6		ヒラネジ゛ 9/64-40 L=6	(2)
43		MAS-05717000	TENSION POST		イトチヨウシボウ	(2)
44	#01	118-95950	TABLE B (FULLY SUNKEN TYPE)		テーブル B クミ (ゼンチン)	1

Note (注記) #01 ..... For semi-sunken type table 卓上式テーブル用
#02 ..... For fully-sunken type table 全沈式テーブル用

From the library of: Diamond Needle Corp

7. S114, S115 : SWING TYPE LOWER INTERMITTENT SHIRRING ATTACHMENT
S114, S115：スイング方式下布ひだ取り装置

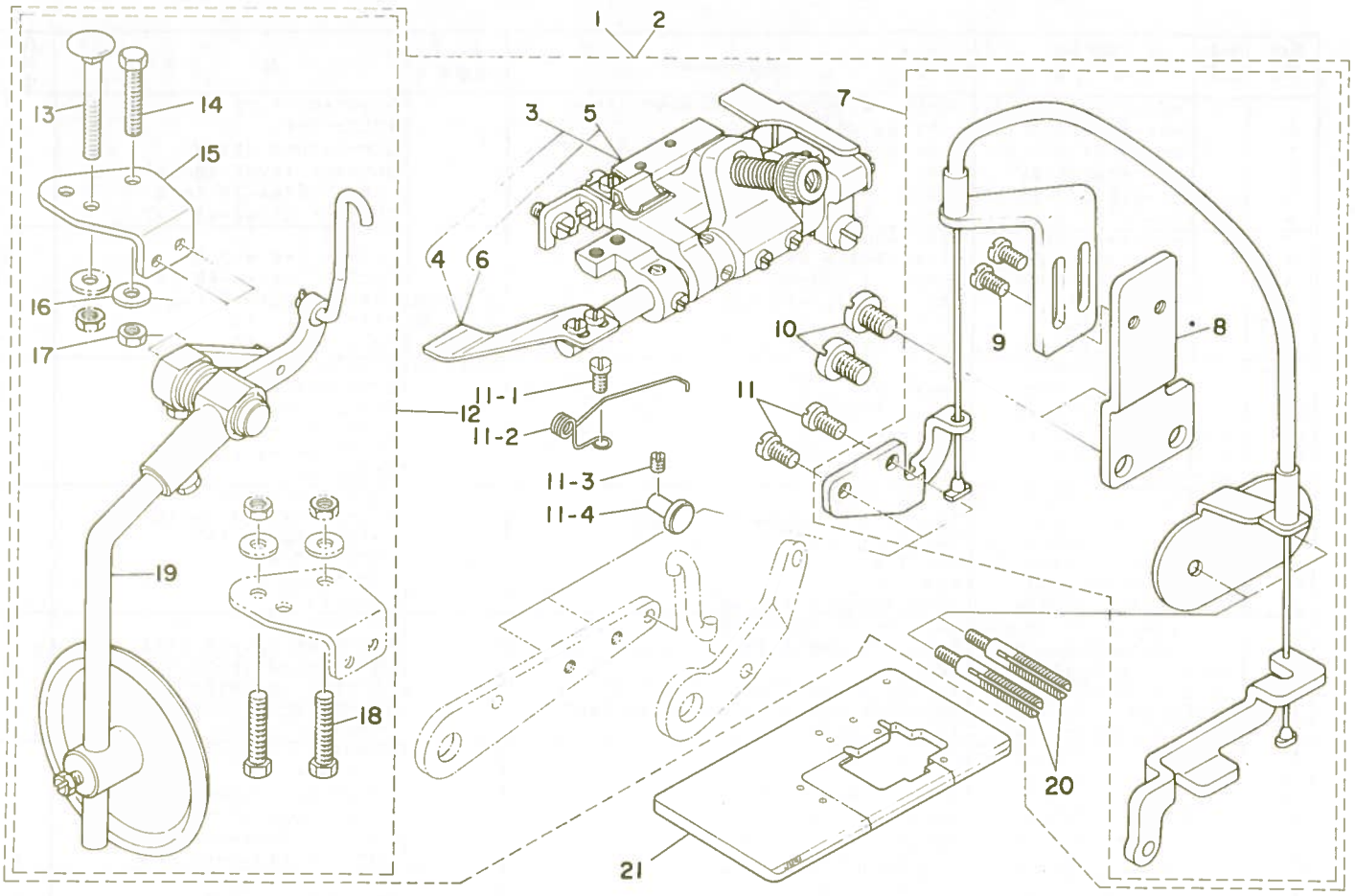

Ref. No.	Note 注記	Part No. 品番	Description	E. C. 変更年月	品名	Amt. Req. 数量
1	#01	MAS-114000A0	LOWER SHIRRING ATTACHMENT ASM.		ﾋﾀﾞﾄﾘｿｰﾁ ｸﾐ	1
2	#02	MAS-115000A0	LOWER SHIRRING ATTACHMENT ASM.		ﾋﾀﾞﾄﾘｿｰﾁ ｸﾐ	1
3	#01	MAS-057010A0	PEDAL SHIRRING ATTACHMENT ASM.		ﾋﾀﾞﾄﾘｿｳﾁ ｸﾐ	(1)
4	#01	MAS-05108000	INTERMITTENT SHIRRING PRESSER PLATE		ﾋﾀﾞﾄﾘｵｻｴ	(1)
5	#02	MAS-058010A0	PEDAL SHIRRING ATTACHMENT ASM.		ﾋﾀﾞﾄﾘｿｰﾁ ｸﾐ	(1)
6	#02	MAS-05208000	INTERMITTENT SHIRRING PLATE		ﾋﾀﾞﾄﾘｵｻｴ	(1)
7		MAS-112120A0	LIFTING WIRE ASM.		ｵｻｴｱｹﾞﾜｲﾔ	(1)
8		MAS-05710000	WIRE STOPPER SUPPORTER		ﾜｲﾔｰｽﾄｯﾊﾟB ｻｻｴｲﾀ	(1)
9		SS-7110710-SP	SCREW 11/64-40 L=7		ﾏﾙﾋﾗﾈｼﾞ 11/64-40 L=7	(2)
10		SS-6151040-SP	SCREW 15/64-28 L=10		ﾋﾗﾈｼﾞ 15/64-28 L=10	(2)
11		SS-7110710-SP	SCREW 11/64-40 L=7		ﾏﾙﾋﾗﾈｼﾞ 11/64-40 L=7	(2)
11-1		SS-6110610-TP	SCREW 11/64-40 L=6	A.05/84	ﾋﾗﾈｼﾞ 11/64-40 L=6	(1)
11-2		MAS-05715000	SPRING	A.05/84	ﾋｷｱｹﾞﾚﾊﾞｰ ﾊﾞﾈ	(1)
11-3		SS-8090410-SP	SCREW 9/64-40 L= 3.5	A.05/84	ﾄﾒﾈｼﾞ 9/64-40 L=3.5	(1)
11-4		MAS-05714000	PIN	A.05/84	ﾋｷｱｹﾞﾚﾊﾞｰ ﾋﾝｼﾞｼﾞｸ	(1)
12		MAS-107010A0	KNEE OPERATING DEVICE ASM.	C.05/84	MAS-107010C0	(1)
13	#03	MAS-10704000	BOLT		ｳｹｲﾀﾎﾞﾙﾄ	(1)
14	#03	SM-9083013-SC	SCREW M8 L=30		ﾛｯｶｸﾎﾞﾙﾄ M8 L=30	(1)
15		MAS-10701000	INSTALLING PLATE		ﾋｻﾞｱｹﾞﾚﾊﾞｰﾀﾞｲ ﾄﾘｯｹｲﾀ	(1)
16	#03	WP-0850002-SC	WASHER 8.5X18X1.6		ﾋﾗｻﾞｶﾞﾈ 8.5X18X1.6	(1)
17	#03	NM-6080600-SM	NUT M8		ﾛｯｶｸﾅｯﾄ M8 10X11.5	(1)
18	#04	SM-9084533-SC	SCREW M8 L=45		ﾛｯｶｸﾎﾞﾙﾄ M8 L=45	(2)
19		MAS-107010C0	KNEE PRESS PLATE ASM.	C.05/84	MAS-107010A0	(1)
20		MAS-05717000	TENSION POST		ｲﾄﾁｮｳｼﾎﾞｳ	(2)
21		118-95950	TABLE B (FULLY SUNKEN TYPE)		ﾃｰﾌﾞﾙ B ｸﾐ (ｾﾞﾝﾁﾝ)	1

Note (注記) #01 ..... For S114 — S114用
#02 ..... For S115 — S115用
#03 ..... For semi-sunken type table — 卓上式テーブル用
#04 ..... For fully-sunken type table — 全沈式テーブル用

From the library of: Diamond Needle Corp

8. SIMULTANEOUS EXCHANGING GAUGE PARTS FOR MOR-2500 SERIES
MOR-2500シリーズ同時交換ゲージ部品

(1) S112

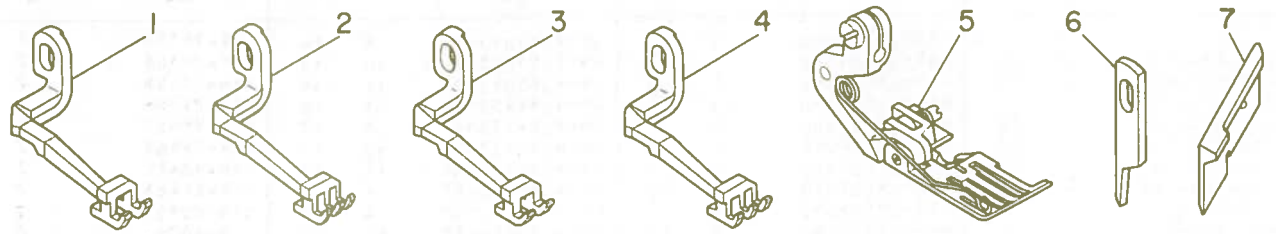

Ref. No.	Note 注記	Part No. 品番	Description	E. C. 変更年月	品名	Amt. Req. 数量
1	#01	119-37505	UPPER FEED DOG		ウワオクリハ゛	1
2	#02	119-37604	UPPER FEED DOG		ウワオクリハ゛	1
3	#03	119-37703	UPPER FEED DOG		ウワオクリハ゛	1
4	#04	119-37802	UPPER FEED DOG		ウワオクリハ゛	1
5	#03	119-34056	PRESSER FOOT ASM.		オサエ クミ	1
6	#03	118-45609	KNIFE		ヒラメス	1
7	#05	118-45906	UPPER KNIFE		ウワメス	1

Note (注記) #01 ..... For MOR-2514-BD4 — MOR-2514-BD4用
#02 ..... For MOR-2514-BD6 — MOR-2514-BD6用
#03 ..... For MOR-2516-DD4 — MOR-2516-DD4用
#04 ..... For MOR-2516-FF6, MOR-2516-RH6, MOR-2543-DBD6 — MOR-2516-FF6, -RH6, MOR-2543-DBD6用
#05 ..... For MOR-2516-DD4 (For export) — MOR-2516-DD4(輸出用)

(2) S114, S098

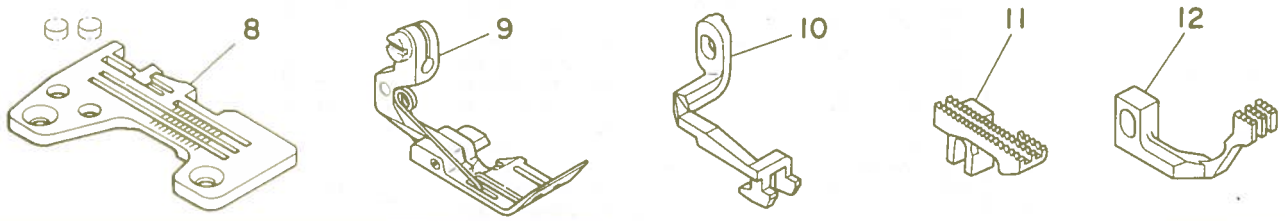

Ref. No.	Note 注記	Part No. 品番	Description	E. C. 変更年月	品名	Amt. Req. 数量
8		R4305-H00-E0A	THROAT PLATE		ハリイタ	1
9		119-35053	PRESSER FOOT ASM.		オサエ クミ	1
10		119-38602	UPPER FEED DOG		ウワオクリハ゛	1
11		118-83402	MAIN FEED DOG		シュオクリハ゛	1
12		B1657-814-B0L	DIFFERENTIAL FEED DOG		フクオクリハ゛	1

(3) S115, S097

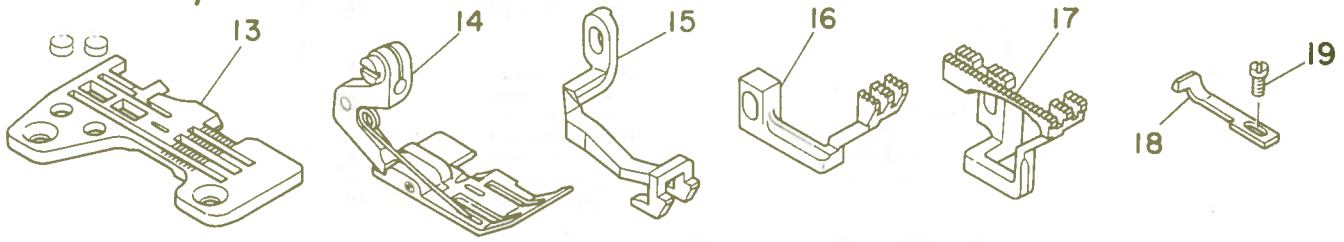

Ref. No.	Note 注記	Part No. 品番	Description	E. C. 変更年月	品名	Amt. Req. 数量
13		R4612-H0F-B00	THROAT PLATE		ハリイタ	1
14		119-35152	PRESSER FOOT ASM.		オサエ クミ	1
15		119-38701	UPPER FEED DOG		ウワオクリハ゛	1
16		118-85902	DIFFERENTIAL FEED DOG		フクオクリハ゛	1
17		118-84103	MAIN FEED DOG		シュオクリハ゛	1
18		B4120-816-F0C-A	NEEDLE GUARD		ハリウケ E	1
19		SS-7060610-SP	SCREW 3/32-56 L= 5.5		マルヒラネジ゛ 3/32-56 L=5.5	1

From the library of: Diamond Needle Corp

Part No. 品番	Page 頁	Ref. No.
B1657-814-P0L	2	25
B1657-814-B0L	12	12
B3105-804-000	4	17
B3105-804-000	6	22
B3110-125-000	4	22
B3110-125-000	6	27
B3120-125-000	4	21
B3120-125-000	6	26
B3427-122-000	10	25
B3430-552-0A0	8	21
B3430-552-0A0	10	20
B3431-552-000-A	8	23
B3431-552-000-A	10	21
B4120-816-D0B-A	2	8
B4120-816-F0C-A	2	9
B4120-816-F0C-A	12	18
B4120-816-R0A	2	10
CS-079081A-SP	4	18
CS-079081A-SP	6	23
CS-1111019-SP	10	16
GAK-01003800	10	35
MAS-0510800A	2	12
MAS-0510800A	4	33
MAS-0510800A	6	39
MAS-0510800	4	3
MAS-0510800	6	3
MAS-0510800	11	4
MAS-0520400	4	15
MAS-0520400	6	20
MAS-0520500	4	16
MAS-0520500	6	21
MAS-0520600	4	23
MAS-0520600	6	28
MAS-0520700	4	13
MAS-0520700	6	18
MAS-0520800	4	4
MAS-0520800	6	4
MAS-0520800	11	6
MAS-0520900	4	25
MAS-0520900	6	30
MAS-0521200	4	28
MAS-0521200	6	33
MAS-0570100	1	18
MAS-0570100	4	1
MAS-0570100	11	3
MAS-0570100	4	5
MAS-0570100	6	11
MAS-0570100	4	30
MAS-0570100	6	36
MAS-0570200	4	8
MAS-0570200	6	35
MAS-0570300	4	11
MAS-0570300	6	16
MAS-0570400	4	26
MAS-0570400	6	31
MAS-0570500	1	1
MAS-0570500	8	1
MAS-0571000	8	3
MAS-0571000	10	3
MAS-0571000	11	8
MAS-0571400	1	6
MAS-0571400	8	11
MAS-0571400	10	9-4
MAS-0571400	11	11-4
MAS-0571500	1	9
MAS-0571500	8	9
MAS-0571500	10	9-2
MAS-0571500	11	11-2
MAS-0571600	1	4
MAS-0571600	8	6
MAS-0571700	8	34
MAS-0571700	10	43
MAS-0571700	11	20
MAS-0580100	1	19
MAS-0580100	4	2
MAS-0580100	11	5
MAS-0920100	6	7
MAS-0920200	6	9
MAS-0920300	6	6
MAS-0970100	1	20
MAS-0970100	6	1
MAS-0980100	1	21
MAS-0980100	6	2
MAS-1050100	8	24
MAS-1050200	8	32
MAS-1050300	8	28
MAS-1050400	8	33
MAS-1070100	1	10
MAS-1070100	8	12
MAS-1070100	11	12
MAS-1070100	1	17
MAS-1070100	8	19
MAS-1070100	11	19
MAS-1070100	1	13
MAS-1070100	8	15
MAS-1070100	11	15
MAS-1070200	8	20
MAS-1070200	10	19
MAS-1070300	8	30
MAS-1070400	1	11
MAS-1070400	8	13
MAS-1070400	10	14
MAS-1070400	11	13
MAS-1120000	10	1
MAS-1120100	10	7
MAS-1120600	10	10
MAS-1120700	10	28
MAS-1120800	10	37
MAS-1120900	10	18
MAS-1121000	10	30
MAS-1121100	10	15
MAS-1121200	10	2
MAS-1121200	11	7
MAS-1121400	10	39
MAS-1121400	10	40
MAS-1121500	10	41
MAS-1140000	11	1
MAS-1150000	11	2
NM-6060003-SC	10	38
NM-6080600-SM	1	15
NM-6080600-SM	8	17
NM-6080600-SM	10	23
NM-6080600-SM	11	17
NS-6110310-SP	10	32
NS-6120310-SP	1	5
NS-6120310-SP	8	7
NS-6150310-SP	6	10
NS-6150310-SP	10	34
NS-6160520-SP	4	32
NS-6160520-SP	6	38
PD-0201000-00	8	31
R4300-H0D-D0A	2	23
R4305-H0D-E0A	2	22
R4305-H00-E0A	12	8
R4612-H0F-B00	2	5
R4612-H0F-B00	12	13
SD-0500251-SP	10	8
SD-0550501-SP	8	29
SD-0640321-SP	10	11
SD-0640322-TP	6	8
SD-0790801-SP	4	10
SD-0790801-SP	6	14
SM-9083013-SC	1	12
SM-9083013-SC	8	14
SM-9083013-SC	10	13
SM-9083013-SC	11	14
SM-9084533-SC	1	16
SM-9084533-SC	8	18
SM-9084533-SC	10	12
SM-9084533-SC	11	18
SS-6090650-SP	4	6
SS-6090650-SP	6	12
SS-6090650-SP	10	42
SS-6110610-TP	1	8
SS-6110610-TP	8	8
SS-6110610-TP	10	9-1
SS-6110610-TP	11	11-1
SS-6110650-TP	4	29
SS-6110650-TP	6	34
SS-6110710-SP	6	25
SS-6110710-TP	4	20
SS-6120940-SP	4	31
SS-6120940-SP	6	37
SS-6121010-SP	1	2
SS-6121010-SP	8	5
SS-6151040-SP	1	3
SS-6151040-SP	8	4
SS-6151040-SP	10	5
SS-6151040-SP	11	10
SS-6151440-SP	4	14
SS-6151440-SP	6	19
SS-7060610-SP	2	11
SS-7060610-SP	12	19
SS-7090520-SP	6	5
SS-7110510-SP	4	27
SS-7110510-SP	6	32
SS-7110710-SP	4	12
SS-7110710-SP	4	24
SS-7110710-SP	6	17
SS-7110710-SP	6	29
SS-7110710-SP	8	2
SS-7110710-SP	10	4
SS-7110710-SP	10	6
SS-7110710-SP	10	9
SS-7110710-SP	10	31
SS-7110710-SP	11	9
SS-7110710-SP	11	11
SS-7112420-SP	10	33
SS-7151210-SP	10	36
SS-8090410-SP	1	7
SS-8090410-SP	8	10
SS-8090410-SP	10	9-3
SS-8090410-SP	11	11-3
SS-8110520-TP	4	7
SS-8110520-TP	4	19
SS-8110520-TP	6	13
SS-8110520-TP	6	24
SS-8660330-SP	10	17
SS-9151220-SR	8	27
SS-9181520-CP	10	27
SS-9182010-SN	10	26
SS-9661230-CP	8	22
SS-9661230-CP	10	22
SS-9661610-CP	10	29
SS-9081610-TP	8	26
WP-0740516-SP	8	25
WP-0850002-SC	1	14
WP-0850002-SC	8	16
WP-0850002-SC	10	24
WP-0850002-SC	11	16
WZ-0850302-K0	4	9
WZ-0850302-K0	6	15
118-45609	2	7
118-45609	12	6
118-45807	2	6
118-45906	12	7
118-78857	2	21
118-78865	2	21-1
118-79350	2	20
118-79368	2	20-1
118-79558	2	1
118-79566	2	1-1
118-79657	2	2
118-79665	2	2-1
118-80457	2	3
118-80465	2	3-1
118-80853	2	4
118-80861	2	4-1
118-83402	2	24
118-83402	12	11
118-83709	2	13
118-83808	2	14
118-83907	2	15
118-84103	2	16
118-84103	12	17
118-85704	2	17
118-85803	2	18
118-85902	2	19
118-85902	12	16
118-95950	10	44
118-95950	11	21
118-97501	2	26
119-34056	12	5
119-35053	12	9
119-35152	12	14
119-37505	12	1
119-37604	12	2
119-37703	12	3
119-37802	12	4
119-38602	12	10
119-38701	12	15

From the library of: Diamond Needle Corp

From the library of: Diamond Needle Corp

From the library of: Diamond Needle Corp

From the library of: Diamond Needle Corp

JUKI
TOKYO JUKI INDUSTRIAL CO., LTD.

Address : 23-3, Kabuki-cho 1-chome, Shinjuku-ku,
Tokyo 160, Japan
Cable : JUKI TOKYO
Telex : J22967, 232-2301
Phone : 03 (205) 1188, 1189, 1190

東京重機工業株式会社

〒160
東京都新宿区歌舞伎町1丁目23番3号 TEL(03)205-1188(代)

Printed in Japan(T)

From the library of: Diamond Needle Corp